Model ZJN-82C500Y001
500W 220V，Brushless Motor (Peripheral By Pass)
vacuum cleaner motor
Applications

Fume/Smoke Extraction，Ventilation Devices，Air-blasting Equipment，
Printing Machine，Spraying Equipment，CarvModel ZJN-82C500Y001
500W 220V，Brushless Motor (Peripheral By Pass)
vacuum cleaner motor
Applications

Fume/Smoke Extraction，Ventilation Devices，Air-blasting Equipment，
Printing Machine，Spraying Equipment，Carved Equipment，Dust Extraction，
Small Industrial Vacuum Cleaner，Welding Smoke Purifiers，Medical Laser Fume Extraction，
Vacuum Cleaner(Central Vacuum, Industry Vacuum, Vacuum Wet & Dry)，
Floor Scrubber，Hopper loader，Spray Device.

Basic Parameter:
Voltage（V):220
Power（W):500
Fan System:Peripheral By Pass,2Stage
Insulation:F
Max. Air Flow（m^3/min):2.21
Max.Vacuum Pressure（kPa):16.14
Weight（kg):1.63

Max.Efficiency
Orifice（mm):16
Vacuum Pressure（kPa):7.64
Air Flow（m^3/min):1.2moke Purifiers，Medical Laser Fume Extraction，
Vacuum Cleaner(Central Vacuum, Industry Vacuum, Vacuum Wet & Dry)，
Floor Scrubber，Hopper loader，Spray Device.

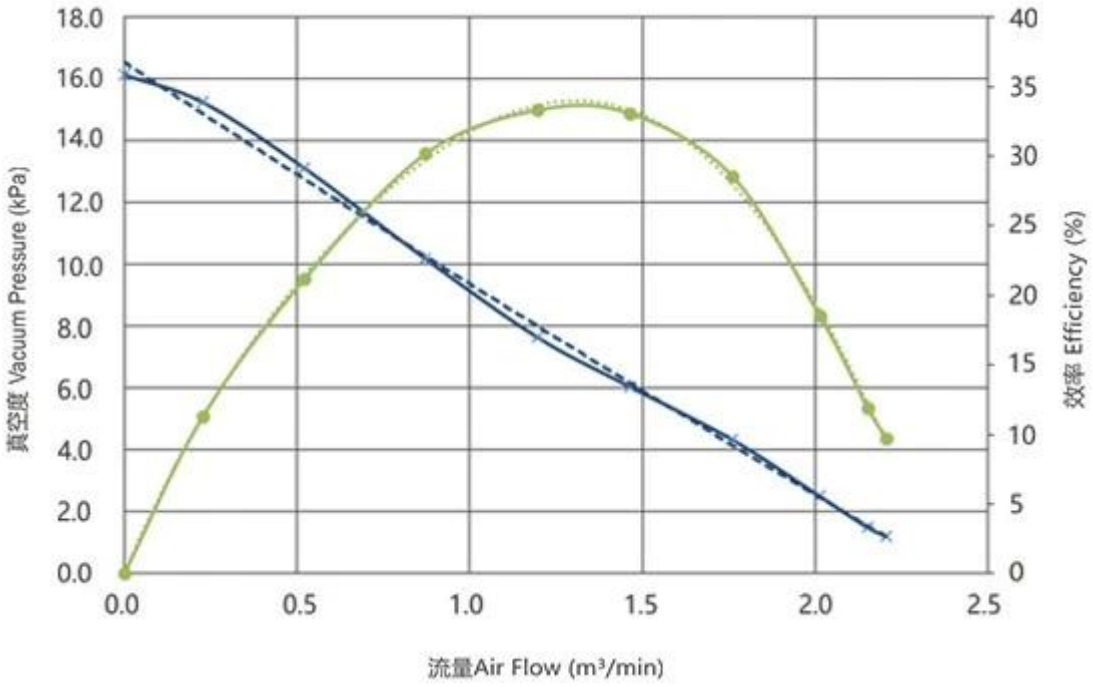
18.0
16.0
14.0
12.0
10.0
8.0
6.0
4.0
2.0
0.0
0.0
0.5
1.0
1.5
2.0
2.5
40
35
30
25
20
15
10
5
0
真空度 Vacuum Pressure (kPa)
效率 Efficiency (%)
流量Air Flow (m³/min)

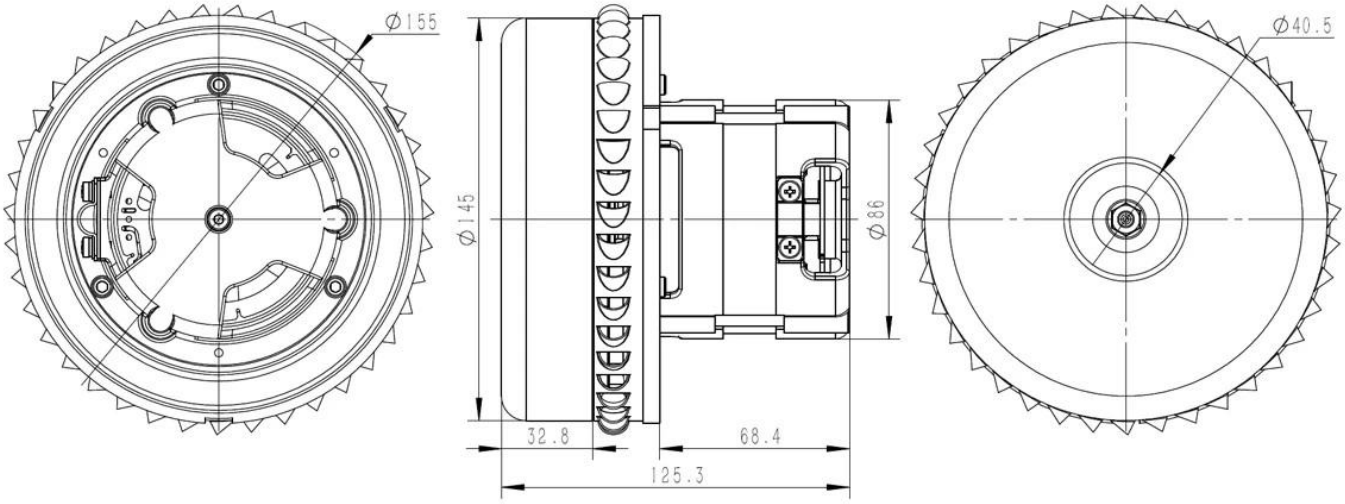
Ø155
Ø145
Ø86
Ø40.5
32.8
68.4
125.3